TMG POWER

www.tmgpower.com.tr



BAUDOUIN DIESEL GENSET

MOTEURS Baudouin

TMGB-110

Group		Standby Power	Prime Power
Power	kVA	110	100
Power	kW	88	80
Engine Speed	rpm	1500	
Standard Voltage	V	400	
Power Factor	Cos ϕ	0,8	

Continuous Power

The maximum power which a generating set is capable of delivering continuouslywhilst supplying a constant electrical load. Average load can be 100%. The generator must not be overloaded.

Standby Power

The maxpower available during a variable electrical power sequence, under the stated operating conditions, for which a generating set is capable of delivering in the event of a utilitypower outage or under test conditions for up to 200 hrs of operation per year under average of 70%load.Overloading isn't permissible.

Prime Power

The maximum power which a generating set is capable of delivering continuouslywhilst supplying a variable electrical load. Average load should be 70%. The generator can be overloaded 10% for 1 hour per 12 hrs.

Kamaradere Mah. Dağyolu Cadd. No:75 Marmaraereğlisi/Tekirdağ

+90 212 504 04 54 - info@tmgpower.com.tr

TMG POWER

TMGB-110

Engine Properties

Brand		BAUDOUIN
Model		4M10G110/5
Standby	kW	100
Prime	kW	90
Cylinder Displacement	lt	4.08
Number of Cylinders / Type	mmxmm	4 / In Ine
Bore x Stroke		105x118
Compression Ratio		17.5:1
Governor Type		Electronic
Idle Speed	rpm	1500
Aspiration		Turbocharged Aftercooled
Injection Type		Direct Injection
Cooling system		Liquid Cooled
Fuel Consumption %100	lt/h	21.2
Fuel Consumption %75	lt/h	16
Fuel Consumption %50	lt/h	10.5
Oil Capacity	lt	13
Cooling Liquid Capacity	lt	23.6
Battery Voltage	V	12
Battery Capacity	A	60

Alternator Properties

Output Voltage	V	230/400
Frequency	HZ	50
Automatic Voltage Regulation	±%	0,5
Phase		3
Pole		4
Overload		1 Hour %110
Voltage Regulation		±%1
Power Factor	Cosϕ	0,8
Warning System		Self Alert
AVR Model		Sx460
Total Harmonic Losing		≤%3
Connecting Type		Star
Protection Class		IP 23
Isolation Class		H

Dimensions

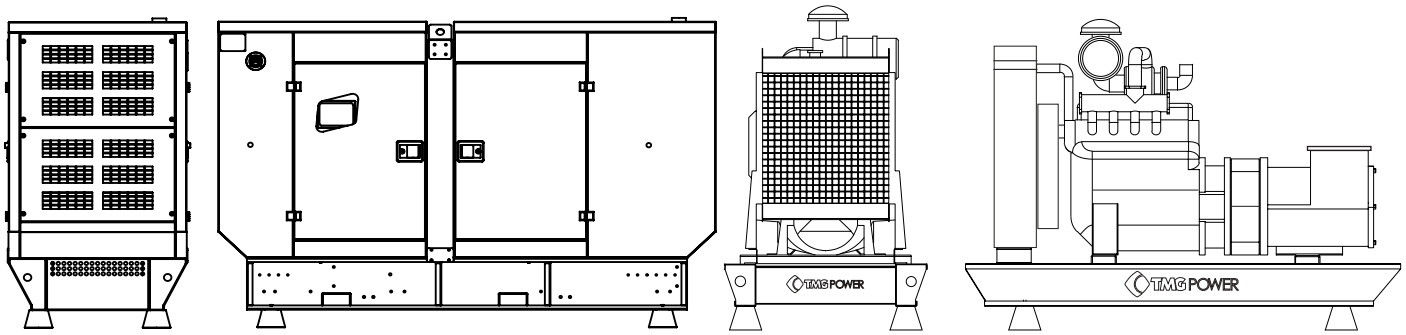

Canopied

L x W x H	mm	2650x950x1660
Weight	kg	TBA
Fuel Tank Capacity	lt	190

Open Set

L x W x H	mm	2350x950xTBA
Weight	kg	TBA
Fuel Tank Capacity	lt	190

Standard Specification

Some standard equipments that TMG POWER provides with generator sets;

- 50°C cooland radiator
- Flexible fuelpipes and oil drain valve
- Engine jacket heater
- 4 pole synchronous type self-excited brushless alternator
- Battery and wires
- Entegrated fuel tank
- User and maintenance manual
- Oil and antifreeze
- Datakom D-500 controller
- Battery charger
- Electrical circuit diagram

Kamaradere Mah. Dağyolu Cadd. No:75 Marmaraereğlisi/Tekirdağ

+90 212 504 04 54 - info@tmgpower.com.tr

TMG POWER

TMGB-110

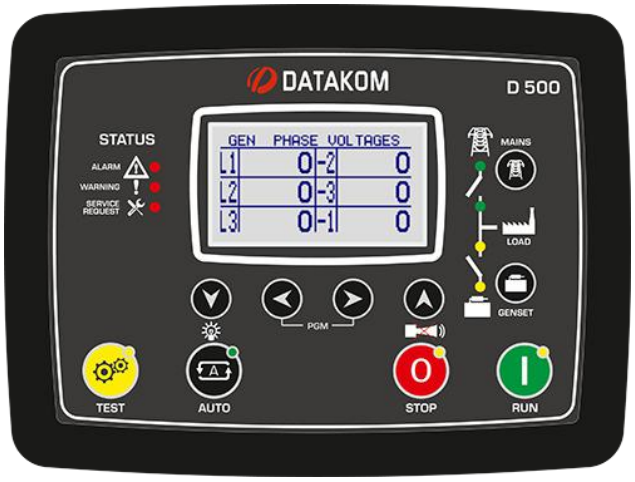

- Diesel and gas genset support
- 400Hz operation support
- 400 event logs, full snapshot
- All parameters front panel editable
- 3 level configuration password
- 128x64 graphical LCD display
- Downloadable languages
- Waveform display of V & I
- Harmonic analysis of V & I
- 16Amp MCB & GCB outputs
- 8 configurable digital inputs
- 6 configurable digital outputs
- 3 configurable analog inputs
- 3 configurable service alarms
- Both CANBUS-J1939 & MPU
- Multiple automatic exerciser
- Weekly operation schedule
- Dual mutual standby with equal aging of gensets
- Manual “speed fine adjust” on selected ECUs
- Automatic fuel pump control
- Disable protections feature
- Excess power protection
- Reverse power protection
- Overload IDMT protection
- Load shedding, dummy load
- Multiple load management
- Current unbalance protection
- Voltage unbalance protection
- Fuel filling & fuel theft alarm
- Battery back-up real time clock
- Idle speed control
- Battery charge run enabled
- Combat mode support
- Multiple nominal conditions
- Contactor & MCB drive
- 4 quadrant genset powercounters
- Mains power counters
- Fuel filling counters
- Fuel consumption counter
- Modem diagnostics display
- Configurable through USB, RS-485, Ethernet and GPRS
- Free configuration program
- Allows SMS controls
- Ready for central monitoring
- Mobile genset support
- Automatic GSM geo-location
- Easy USB firmware upgrade
- IP 65 rating with optional gasket

Optional Specification

Some Optional Equipments that TMG POWER provides with generator Sets;

- Auto refueling system
- Extra fuel tank , coil heaters
- Remote radiator
- Syncronization system
- Circuit breaker
- Special soundproof canopies
- Siesmic solutions
- Trailer
- Remote control panel
- Automatic transfer switch

Kamaradere Mah. Dağyolu Cadd. No:75 Marmaraereğlisi/Tekirdağ
+90 212 504 04 54 - info@tmgpower.com.tr